nature physics

LETTERS

PUBLISHED ONLINE: 7 JUNE 2009 | DOI: 10.1038/NPHYS1301

# Demonstration of an ultracold micro-optomechanical oscillator in a cryogenic cavity

Simon Gröblacher[1,2], Jared B. Hertzberg[3,4], Michael R. Vanner[1,2], Garrett D. Cole[1,5], Sylvain Gigan[6], K. C. Schwab[3]* and Markus Aspelmeyer[1]†

**Preparing and manipulating quantum states of mechanical resonators is a highly interdisciplinary undertaking that now receives enormous interest for its far-reaching potential in fundamental and applied science[1,2]. Up to now, only nanoscale mechanical devices achieved operation close to the quantum regime[3,4]. We report a new micro-optomechanical resonator that is laser cooled to a level of 30 thermal quanta. This is equivalent to the best nanomechanical devices, however, with a mass more than four orders of magnitude larger (43 ng versus 1 pg) and at more than two orders of magnitude higher environment temperature (5 K versus 30 mK). Despite the large laser-added cooling factor of 4,000 and the cryogenic environment, our cooling performance is not limited by residual absorption effects. These results pave the way for the preparation of 100-μm scale objects in the quantum regime. Possible applications range from quantum-limited optomechanical sensing devices to macroscopic tests of quantum physics[5,6].**

Recently, the combination of high-finesse optical cavities with mechanical resonators has opened up new possibilities for preparing and detecting mechanical systems close to—and even in—the quantum regime by using well-established methods of quantum optics. Most prominently, the mechanism of efficient laser cooling has been demonstrated[7–13] and has been shown to be capable, in principle, of reaching the quantum ground state[14–16]. A particularly intriguing feature of this approach is that it can be applied to mechanical objects of almost arbitrary size, from the nanoscale in microwave strip-line cavities[13] up to the centimetre scale in gravitational-wave interferometers[11]. In addition, whereas quantum-limited readout is still a challenging development step for non-optical schemes[3,17,18], optical readout techniques at the quantum limit are readily available[19].

Approaching and eventually entering the quantum regime of mechanical resonators through optomechanical interactions essentially requires the following three conditions to be fulfilled: (1) sideband-resolved operation; that is, the cavity amplitude decay rate $\kappa$ has to be small with respect to the mechanical frequency $\omega_m$; (2) both ultralow noise and low absorption of the optical cavity field (phase noise at the mechanical frequency can act as a finite-temperature thermal reservoir and absorption can increase the mode temperature and even diminish the cavity performance in the case of superconducting cavities); and (3) sufficiently small coupling of the mechanical resonator to the thermal environment; that is, low environment temperature $T$ and large mechanical quality factor $Q$ (the thermal coupling rate is given by $k_B T/\hbar Q$, where $k_B$ is the Boltzmann constant and $\hbar$ is the reduced Planck constant). So far, no experiment has demonstrated all three requirements simultaneously. Criterion (1) has been achieved[10,13,20]; however, the performance was limited in one case by laser phase noise[10] and in the other cases by absorption in the cavity[13,20]. Other, independent, experiments have implemented only criterion (2)[11,12,19,21]. Finally, criterion (3) has been realized in several cryogenic experiments[4,13,21,22], however not in combination with both (1) and (2).

We have designed a novel micro-optomechanical device that enables us to meet all requirements at the same time. Specifically, we have fabricated a $Si_3N_4$ micromechanical resonator that carries a high-reflectivity, ultralow-loss Bragg mirror (Fig. 1a), which serves as the end mirror of a Fabry–Pérot cavity. We designed the system to exhibit a fundamental mechanical mode at relatively high frequency (of the order of 1 MHz; Fig. 1b) such that sideband-resolved operation (criterion (1)) can be achieved already with a medium-finesse cavity. Criterion (2) can first be fulfilled because our solid-state pump laser used for optical cooling exhibits low phase noise (laser linewidth below 1 kHz). Second, absorption in the Bragg mirror is sufficiently low to prevent residual heating in the mechanical structure. Absorption levels as low as $10^{-6}$ have been reported for similar Bragg mirrors[23] and recent measurements suggest even lower values of $4 \times 10^{-7}$ for the specific coatings used in this experiment (R. Lalezari, private communication). In addition, although absorption in $Si_3N_4$ is comparable to silicon, the transmission mismatch of the two cavity mirrors (∼10:1) and the resulting low transmission through the Bragg mirror prevents residual heating of the resonator as has been observed for cryogenically cooled silicon cantilevers[24]. Finally, criterion (3) requires low temperature and high mechanical quality. The mechanical properties of our design are dominated by the $Si_3N_4$, which is known to exhibit superior performance in particular at low temperatures, where $Q$-factors beyond $10^6$ have been observed at millikelvin temperatures[25].

We operate our device, a 100 μm × 50 μm × 1 μm mechanical resonator, in a cryogenic $^4$He environment at $10^{-7}$ mbar and in direct contact with the cryostat cold finger. To measure the mechanical displacement, the frequency of a 7 μW continuous-wave Nd:YAG laser is locked close to resonance of the cryogenic Fabry–Pérot cavity (length $L \approx 25$ mm), which consists of a fixed macroscopic mirror and the moving micromechanical mirror. The optical

[1]Institute for Quantum Optics and Quantum Information (IQOQI), Austrian Academy of Sciences, Boltzmanngasse 3, A-1090 Vienna, Austria, [2]Faculty of Physics, University of Vienna, Boltzmanngasse 5, A-1090 Vienna, Austria, [3]Department of Physics, Cornell University, Ithaca, New York 14853, USA, [4]Department of Physics, University of Maryland, College Park, Maryland 20742, USA, [5]The Center for Micro- and Nanostructures (ZMNS), Vienna University of Technology, Floragasse 7, A-1040 Vienna, Austria, [6]Laboratoire Photon et Matière, Ecole Superieure de Physique et de Chimie Industrielles, CNRS-UPRA0005, 10 rue Vauquelin, 75005 Paris, France. *Permanent address: Department of Applied Physics, Caltech, Pasadena, California 91125, USA. †e-mail: markus.aspelmeyer@quantum.at.



© 2009 Macmillan Publishers Limited. All rights reserved.

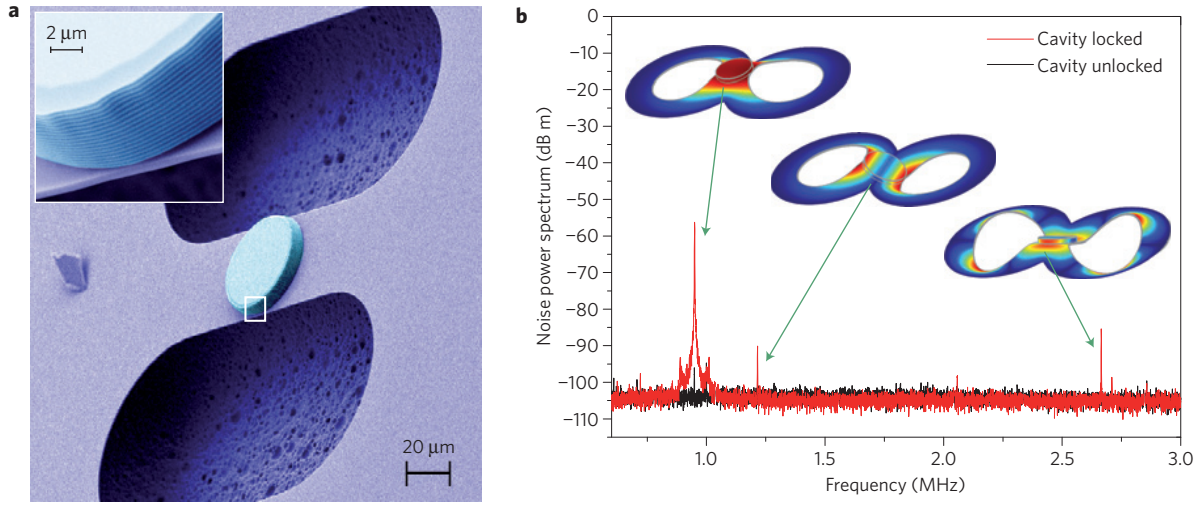


**Figure 1 | High-quality micro-optomechanical resonator. a**, Scanning electron micrograph of the basic mechanical system, which is formed by a doubly clamped $Si_3N_4$ beam. A circular, high-reflectivity Bragg mirror is used as the end mirror of a Fabry–Pérot cavity. The Bragg mirror is made of low-absorption, alternating dielectric stacks of $Ta_2O_5/SiO_2$. The magnified section in the inset shows the stacking sequence. **b**, Micromechanical displacement spectra shown as noise power spectra of the readout-beam phase quadrature for a locked and an unlocked cavity. The fundamental mode at $\omega_m = 2\pi \times 945$ kHz and all higher mechanical modes are identified by finite element simulation. For the cases that involve large Bragg mirror displacements, we provide the simulated mode profile.

cavity of finesse $F \approx 3{,}900$ achieves moderate sideband resolution ($\kappa \approx 0.8\omega_m$), which in principle would allow cooling to a final occupation number $\langle n\rangle_{min} = (\kappa^2/4\omega_m^2) \approx 0.16$, that is, well into the quantum ground state[14,15]. The experimentally achievable temperature is obtained as the equilibrium state of two competing processes, namely the laser cooling rate and the coupling rate to the thermal (cryogenic) environment. In essence, laser cooling is driven (in the ideal resolved-sideband limit and at detuning $\Delta = \omega_m$) at a rate $\Gamma \approx G^2/(2\kappa)$ ($G$ is the effective optomechanical coupling rate, as defined in ref. 16), whereas mechanical relaxation to the thermal environment at temperature $T$ takes place at a rate $(k_B T/\hbar Q)$. The final achievable mechanical occupation number is therefore, to first order, given by $n_f \approx (1/\Gamma) \times (k_B T/\hbar Q)$. A more accurate derivation taking into account effects of non-ideal sideband resolution can be found, for example, in refs 14–16, 26. Our experimental parameters limit the minimum achievable mode temperature to approximately 1 mK ($n_f \approx 30$). The fact that we can observe this value in the experiment (see below) shows that other residual heating effects are negligible. The micromechanical flexural motion modulates the cavity-field phase quadrature, which is measured by optical homodyning. For $Q \gg 1$ its noise power spectrum (NPS) is a direct measure of the mechanical position spectrum $S_q(\omega)$, as described in ref. 16. We observe a minimum noise floor of $2.6 \times 10^{-17}$ m Hz$^{-0.5}$, which is a factor of 4 above the achievable quantum (shot-noise) limit, when taking into account the finite cavity linewidth, the cavity losses and the non-perfect mode-matching, and due to the residual amplitude noise of the pump laser at the sideband frequency of our mechanical mode. We observe the fundamental mechanical mode at $\omega_m = 2\pi \times 945$ kHz with an effective mass $m_{eff} = 43 \pm 2$ ng and a quality factor $Q \approx 30{,}000$ at 5.3 K ($Q \approx 5{,}000$ at 300 K). These values are consistent with independent estimates based on finite-element method simulations yielding $\omega_m = 2\pi \times 945$ kHz and $m_{eff} = 53 \pm 5$ ng (see Supplementary Information).

Optomechanical laser cooling requires driving of the cavity with a red-detuned (that is, off-resonant), optical field[6–13]. We achieve this by coupling a second laser beam—detuned by $\Delta$ in frequency but orthogonal in polarization—into the same spatial cavity mode (Fig. 2a). Birefringence of the cavity material leads to both an optical path length difference for the two cavity modes (resulting in an 800 kHz frequency difference of the cavity peak positions) and a polarization rotation of the outgoing fields. We compensate both effects by an offset in $\Delta$ and by extra linear optical phase retarders, respectively. A change in detuning $\Delta$ modifies the mechanical rigidity and results in both an optical spring effect ($\omega_{eff}(\Delta)$) and damping ($\gamma_{eff}(\Delta)$), which is directly extracted by fitting the NPS using the expressions from ref. 16. Figure 2b shows the predicted behaviour for several powers of the red-detuned beam. The low-power curve at 140 μW is used to determine both the effective mass of the mechanical mode, $m_{eff}$, and the cavity finesse, $F$. For higher powers and detunings closer to cavity resonance, the onset of cavity instability prevents a stable lock (see, for example, ref. 16). All experimental data are in agreement with theory and hence in accordance with pure radiation-pressure effects[15].

The effective mode temperature is obtained through the equipartition theorem. For our experimental parameter regime, $Q \gg 1$ and $\langle n\rangle \gg 0.5$, the integrated NPS is also a direct measure of the mean mechanical mode energy and hence, through the equipartition theorem, of its effective temperature through $T_{eff} = (m_{eff}\,\omega_{eff}^2/k_B)\int_{-\infty}^{+\infty} \mathrm{NPS}(\omega)\,\mathrm{d}\omega$. Note that, for the case of strong optomechanical coupling, normal-mode splitting can occur and has to be taken into account when evaluating the mode temperature[27]. In our present case, this effect is negligible because of the large cavity decay rate $\kappa$. The amplitude of the NPS is calibrated by comparing the mechanical NPS with the NPS of a known frequency modulation applied to the laser (see, for example, ref. 28). For a cold-finger temperature of 5.3 K, we obtain a mode temperature $T = 2.3$ K, which is consistent with an expected moderate cooling due to slightly off-resonant locking of the Fabry–Pérot cavity (by less than 3% of the cavity intensity linewidth). The locking point is deliberately chosen to be on the cooling side to avoid unwanted parametric mechanical instabilities. The mean thermal occupancy was calculated according to $\langle n\rangle = k_B T_{eff}/\hbar\omega_{eff}$. We note, however, that Bose–Einstein statistics will have a dominant role as one approaches the quantum ground state.

Figure 3a shows mechanical noise power spectra with the cooling beam switched off and with maximum cooling beam pump power at 7 mW. For a detuning $\Delta \approx \omega_m$, we demonstrate laser cooling to a mean thermal occupation of $32 \pm 4$ quanta, which is more than 2 orders of magnitude lower than previously reported values for optomechanical devices[10] and is comparable to the lowest


© 2009 Macmillan Publishers Limited. All rights reserved.

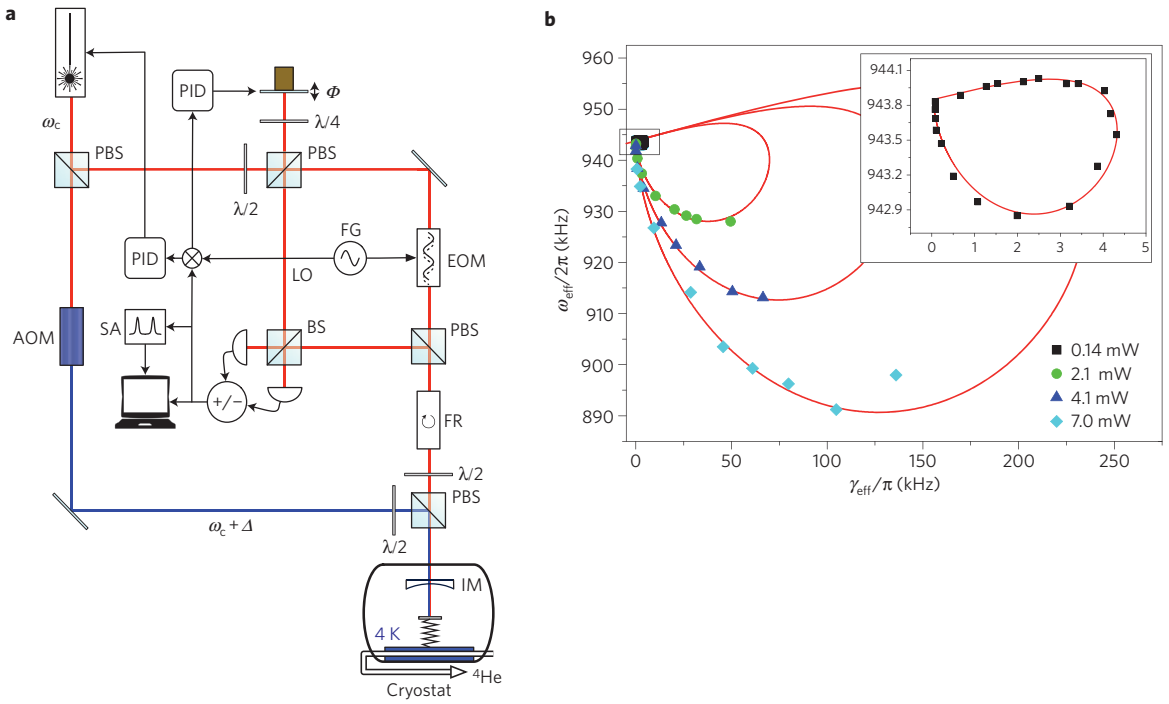


**Figure 2 | Experimental set-up and characterization of optomechanical radiation-pressure interaction. a**, The laser is split at a polarizing beamsplitter (PBS) into a weak locking field (red) tuned near cavity resonance $\omega_c$ and the cooling field (blue) tuned off-resonant with an acousto-optical modulator (AOM) to $\omega_c + \Delta \approx \omega_c - \omega_m$. An electro-optical modulator (EOM) in the weak field is used to generate a Pound–Drever–Hall error signal for cavity locking. The beams are recombined on a PBS into the same spatial mode at orthogonal polarization before they enter the cavity comprising an input mirror (IM) and the micro-mechanical mirror. The phase quadrature of the locking beam is measured in a homodyne detection scheme (BS: beamsplitter; LO: local oscillator; $\Phi$: local oscillator phase; SA: spectrum analyser). $\Phi$ is stabilized in a separate proportional–integral–derivative controller (PID). A combination of a Faraday rotator (FR) and a half-wave plate ($\lambda/2$) separates the reflected from the original signal. **b**, The effective frequency $\omega_{eff}$ and damping $\gamma_{eff}$ of the micro-mechanical motion for different detuning and power settings. All power levels follow the theoretical predictions for pure radiation-pressure interaction. The symbols are experimental data, and the solid lines are simulations based on ref. 16. The inset shows the data set taken at 140 μW optical power.

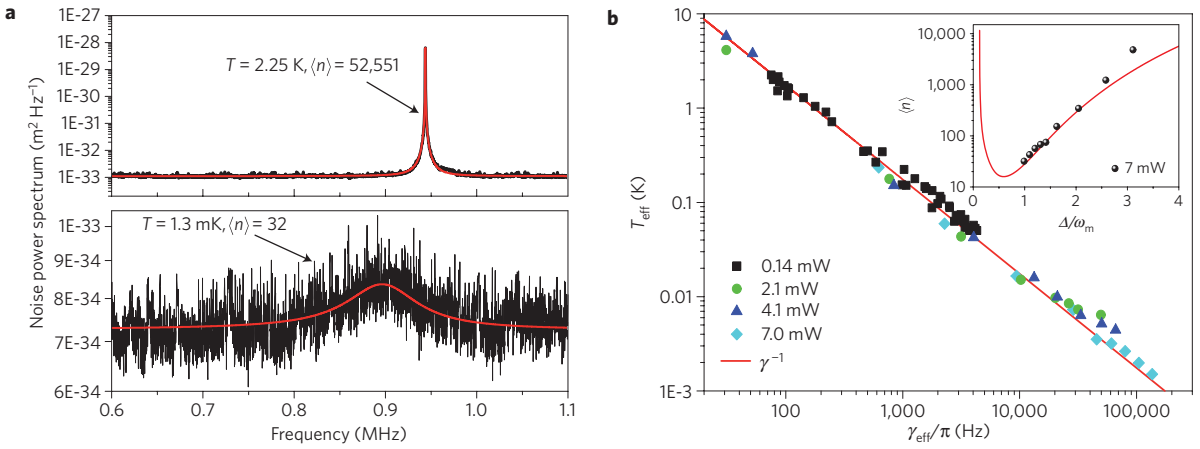


**Figure 3 | Optomechanical laser cooling inside a cryogenic cavity. a**, Calibrated noise power spectra for the fundamental mechanical mode at 5.3 K environmental temperature with small cavity cooling (top) and at maximum cooling (bottom). The thermal energy is reduced from ≈53,000 quanta at 7 μW laser power to 32 ± 4 quanta at 7 mW. The vertical axes in both plots are logarithmic. The change in the technical noise floor is due to different locking levels of the local oscillator phase $\Phi$ in the homodyne detection. **b**, Plot of the calibrated effective temperature $T_{eff}$ versus the observed damping $\gamma_{eff}$ for various power and detuning values of the cooling beam. No deviations from the theoretically expected power-law dependence (red solid line) can be observed. The inset shows the mean thermal occupation $\langle n \rangle$ as a function of detuning for maximal laser power. Cavity instability prevents detunings arbitrarily close to resonance. The red solid curve is a simulation based on ref. 16 that uses only experimentally obtained parameters.

reported temperature of 25 quanta for nano-electromechanical systems[4] (NEMS). In contrast to previous experiments[10,13], the achieved cooling performance is not limited by optical absorption or residual phase noise, but follows exactly the theoretically predicted behaviour (Fig. 3b). This agrees with the expected device performance: a fraction of approximately $10^{-6}$ of the intra-cavity power is absorbed by the Bragg mirror (~13 μW at maximum cooling) and a maximum of 1% of the transmitted power is absorbed by the $Si_3N_4$ beam[29] (~14 μW at maximum cooling and taking into account the impedance mismatch of the cavity mirrors).



© 2009 Macmillan Publishers Limited. All rights reserved.

The cryogenic cooling power of the cryostat used is orders of magnitude larger than the maximum heat load expected on the micromechanical structures. The absence of absorption can also be seen from the inferred mode temperature $T_{\rm eff}$, which decreases with the mechanical damping rate $\gamma_{\rm eff}$ in strict accordance with the power law $T_{\rm eff} \propto \gamma_{\rm eff}^{-1}$. This relation follows immediately from the simple expression for the mechanical occupation $n_{\rm f}$ given above ($n_{\rm f} \propto \Gamma^{-1}$) and from the fact that the laser cooling rate $\Gamma$ is to first approximation equivalent to the effective mechanical damping $\gamma_{\rm eff}$, at least for all data points of our experiment. Both heating and the onset of normal-mode splitting for strong coupling[27] would result in a deviation of this behaviour.

The remaining obstacle that prohibits us from reaching the quantum ground state is the intrinsic phonon coupling to the thermal environment at rate $k_{\rm B}T/\hbar Q \approx 1.4 \times 10^7$ Hz. By reducing the reservoir temperature to that of NEMS experiments (20 mK), this coupling will significantly reduce, not only owing to the lower bath temperature but also because $Si_3N_4$ resonators markedly improve in mechanical $Q$ with decreasing temperature. For example, thermal heating rates as low as $3 \times 10^3$ Hz have been observed for $Si_3N_4$ at 300 mK (ref. 25), which would place our effective mode temperature already well into the quantum ground state using otherwise unchanged parameters.

In summary, we have demonstrated optical cooling of the fundamental mode of a 100 μm scale mechanical resonator in a cryogenic cavity to a thermal occupation of only $32 \pm 4$ quanta. This is comparable to the performance of state-of-the-art NEMS devices. In contrast to previous approaches, the large laser cooling rates attained are no longer limited by residual absorption or phase-noise effects. This is achieved by a new micro-optomechanical resonator design with exceptionally low intrinsic optical absorption and both high optical and mechanical quality. This leaves the reduction of the thermal coupling, for example, by further decreasing the environment temperature to those available in conventional $^3$He cryostats, as the only remaining hurdle to prepare the mechanical quantum ground state. Our approach hence establishes a feasible route towards the quantum regime of massive micromechanical systems.

## Methods

**Micro-mirror fabrication.** Our micro-mechanical oscillator is made of 1-μm-thick low-stress $Si_3N_4$ deposited on a Si substrate and coated through ion beam sputtering with a high-reflectivity Bragg mirror. Standard photolithography and plasma etching is used for forming, in subsequent steps, the mirror pad and the micro-mechanical resonator, which is finally released from the Si substrate in a $XeF_2$ atmosphere. The mirror stack, designed and deposited by ATFilms, comprises 36 alternating layers of $Ta_2O_5$ and $SiO_2$ with an overall nominal reflectivity of 99.991% at 1,064 nm. The measured finesse of 3,900 is consistent with an input coupler reflectivity of 99.91% and with extra diffraction losses due to a finite size of the cavity beam waist.

Received 5 March 2009; accepted 1 May 2009; published online 7 June 2009

## References


1. Schwab, K. C. & Roukes, M. L. Putting mechanics into quantum mechanics. *Phys. Today* **58**, 36–42 (2005).
2. Aspelmeyer, M. & Schwab, K. C. (eds) Mechanical systems at the quantum limit. *New J. Phys.* **10**, 095001 (2008).
3. LaHaye, M., Buu, O., Camarota, B. & Schwab, K. C. Approaching the quantum limit of a nanomechanical resonator. *Science* **304**, 74–77 (2004).
4. Naik, A. *et al.* Cooling a nanomechanical resonator with quantum backaction. *Nature* **443**, 193–196 (2006).
5. Marshall, W., Simon, C., Penrose, R. & Bouwmeester, D. Towards quantum superpositions of a mirror. *Phys. Rev. Lett.* **91**, 130401 (2003).
6. Vitali, D. *et al.* Optomechanical entanglement between a movable mirror and a cavity field. *Phys. Rev. Lett.* **98**, 030405 (2007).
7. Metzger, C. H. & Karrai, K. Cavity cooling of a microlever. *Nature* **432**, 1002–1005 (2004).
8. Gigan, S. *et al.* Self-cooling of a micromirror by radiation pressure. *Nature* **444**, 67–71 (2006).
9. Arcizet, O., Cohadon, P.-F., Briant, T., Pinard, M. & Heidmann, A. Radiation-pressure cooling and micromechanical instability of a micromirror. *Nature* **444**, 71–75 (2006).
10. Schliesser, A., Rivière, R., Anetsberger, G., Arcizet, O. & Kippenberg, T. J. Resolved-sideband cooling of a micromechanical oscillator. *Nature Phys.* **4**, 415–419 (2007).
11. Corbitt, T. *et al.* An all-optical trap for a gram-scale mirror. *Phys. Rev. Lett.* **98**, 150802 (2007).
12. Thompson, J. D. *et al.* Strong dispersive coupling of a high-finesse cavity to a micromechanical membrane. *Nature* **452**, 72–75 (2008).
13. Teufel, J. D., Harlow, J. W., Regal, C. A. & Lehnert, K. W. Dynamical backaction of microwave fields on a nanomechanical oscillator. *Phys. Rev. Lett.* **101**, 197203 (2008).
14. Wilson-Rae, I., Nooshi, N., Zwerger, W. & Kippenberg, T. J. Theory of ground state cooling of a mechanical oscillator using dynamical backaction. *Phys. Rev. Lett.* **99**, 093901 (2007).
15. Marquardt, F., Chen, J. P., Clerk, A. A. & Girvin, S. M. Quantum theory of cavity-assisted sideband cooling of mechanical motion. *Phys. Rev. Lett.* **99**, 093902 (2007).
16. Genes, C., Vitali, D., Tombesi, P., Gigan, S. & Aspelmeyer, M. Ground-state cooling of a micromechanical oscillator: Comparing cold damping and cavity-assisted cooling schemes. *Phys. Rev. A* **77**, 033804 (2008).
17. Regal, C. A., Teufel, J. D. & Lehnert, K. W. Measuring nanomechanical motion with a microwave cavity interferometer. *Nature Phys.* **4**, 555–560 (2008).
18. Poggio, M. *et al.* An off-board quantum point contact as a sensitive detector of cantilever motion. *Nature Phys.* **4**, 635–638 (2008).
19. Arcizet, O. *et al.* High-sensitivity optical monitoring of a micromechanical resonator with a quantum-limited optomechanical sensor. *Phys. Rev. Lett.* **97**, 133601 (2006).
20. Cole, G. D., Gröblacher, S., Gugler, K., Gigan, S. & Aspelmeyer, M. Monocrystalline AlGaAs heterostructures for high-reflectivity high-$Q$ micromechanical resonators in the MHz regime. *Appl. Phys. Lett.* **92**, 261108 (2008).
21. Gröblacher, S., Gigan, S., Böhm, H. R., Zeilinger, A. & Aspelmeyer, M. Radiation-pressure self-cooling of a micromirror in a cryogenic environment. *Eur. Phys. Lett.* **81**, 54003 (2008).
22. Poggio, M., Degen, C. L., Mamin, H. J. & Rugar, D. Feedback cooling of a cantilever's fundamental mode below 5 mK. *Phys. Rev. Lett.* **99**, 017201 (2007).
23. Rempe, G., Thompson, R. J., Kimble, H. J. & Lalezari, R. Measurement of ultralow losses in an optical interferometer. *Opt. Lett.* **17**, 363–365 (1996).
24. Bleszynski-Jayich, A. C., Shanks, W. E. & Harris, J. G. E. Noise thermometry and electron thermometry of a sample-on-cantilever system below 1 K. *Appl. Phys. Lett.* **92**, 013123 (2008).
25. Zwickl, B. M. *et al.* High quality mechanical and optical properties of commercial silicon nitride membranes. *Appl. Phys. Lett.* **92**, 103125 (2008).
26. Wilson Rae, I., Nooshi, N., Dobrindt, J., Kippenberg, T. J. & Zwerger, W. Cavity-assisted backaction cooling of mechanical resonators. *New J. Phys.* **10**, 095007 (2008).
27. Dobrindt, J. M., Wilson-Rae, I. & Kippenberg, T. J. Optomechanical normal-mode splitting. *Phys. Rev. Lett.* **101**, 263602 (2008).
28. Pinard, M., Hadjar, Y. & Heidmann, A. Effective mass in quantum effects of radiation pressure. *Eur. Phys. J. D* **7**, 107–116 (1997).
29. Edward, D., Palik, E. D. & Ghosh, G. (eds) *Handbook of Optical Constants of Solids* (Academic, 1998).


## Acknowledgements

We thank R. Lalezari (ATFilms) and M. Metzler, R. Ilic and M. Skvarla (CNF) and F. Blaser, T. Corbitt and W. Lang for discussion and support. We acknowledge support by the Austrian Science Fund FWF (Projects P19539, L426, START), by the European Commission (Projects MINOS, IQOS) and by the Foundational Questions Institute fqxi.org (Grants RFP2-08-03, RFP2-08-27). Part of this work was carried out at the Cornell NanoScale Facility, a member of the National Nanotechnology Infrastructure Network, which is supported by the National Science Foundation (Grant ECS-0335765). S.Gr. is a recipient of a DOC-fellowship of the Austrian Academy of Sciences and G.D.C. of a Marie Curie Fellowship of the European Commission. S.Gr. and M.R.V. are members of the FWF doctoral program Complex Quantum Systems (W1210).

## Author contributions

All authors have made a significant contribution to the concept, design, execution or interpretation of the presented work.

## Additional information

Supplementary information accompanies this paper on www.nature.com/naturephysics. Reprints and permissions information is available online at http://npg.nature.com/reprintsandpermissions. Correspondence and requests for materials should be addressed to M.A.



© 2009 Macmillan Publishers Limited. All rights reserved.